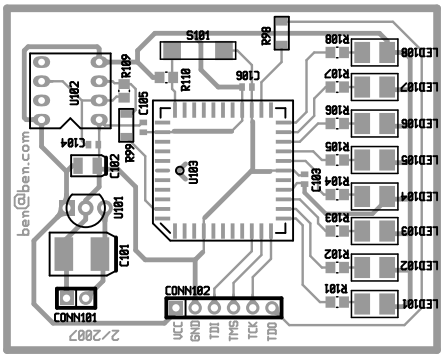

(null), frontassembly, scale = 1:1.000
xc9536.pcb